Journal of Affective Disorders 355 (2024) 406–414

Contents lists available at ScienceDirect

Journal of Affective Disorders

journal homepage: www.elsevier.com/locate/jad

Research paper

Development of a self-report screening instrument for emotional dysregulation: the Reactivity, Intensity, Polarity and Stability questionnaire, screening version (RIPoSt-SV)

Giulio Emilio Brancati [a], Ugo De Rosa [a], Donatella Acierno [a], Valerio Caruso [a], Francesco De Dominicis [a,b], Alessandra Petrucci [a,c], Martina Moriconi [a], Camilla Elefante [a], Samuele Gemignani [a], Pierpaolo Medda [a], Elisa Schiavi [a], Giulio Perugi [a,*]

[a] Department of Clinical and Experimental Medicine, University Hospital of Pisa, Psychiatry Unit 2, Pisa, Italy
[b] Mental Health Centre, Local Health Unit 2, Spoleto, Italy
[c] Mental Health Centre, Local Health Unit 2, Terni, Italy

ARTICLE INFO

Keywords:
Emotional dysregulation
Affective instability
Irritability
Emotional over-reactivity
Screening
Mood disorders

ABSTRACT

Background: Emotional dysregulation (ED) refers to the inability to manage emotional experiences or expressions hindering goal-oriented behavior. Moderate impairment on at least two domains among temper control, affective lability, and emotional over-reactivity has been proposed to identify ED in adults with attention-deficit/hyperactivity disorder (ADHD). No screening measure designed for use in diverse psychiatric samples exists. We aimed to develop a self-report screening tool for ED based on the 40-item version of the Reactivity, Intensity, Polarity, and Stability questionnaire (RIPoSt-40).

Methods: 150 adult outpatients with non-psychotic conditions were enrolled between February and July 2023 at the Second Psychiatry Unit of Pisa University Hospital. Clinically significant ED (CSED) was defined based on the previously suggested approach for ADHD. Differences between patients with and without CSED were tested. To develop our screening instrument, a decision tree algorithm was trained by hyperparameter tuning through 5-fold cross-validation in 120 subjects and tested on the remaining 30.

Results: 75 subjects met criteria for CSED (50 %). CSED was associated with lower age and higher prevalence of psychiatric conditions, including minor mood disorders, ADHD, cannabis use disorders, and eating disorders. We identified a decision tree consisting of six items from RIPoSt-40 that effectively detected CSED, with accuracy, sensitivity, specificity, positive and negative predictive values of 80 % or higher in both the training and testing sets.

Limitations: Tertiary-level; no consensus on criteria; sample size.

Conclusion: The screening version of the Reactivity, Intensity, Polarity, and Stability questionnaire (RIPoSt-SV) demonstrates promise as a valuable tool for ED screening in clinical settings.

1. Introduction

The term "emotional regulation" refers to the processes responsible for monitoring, evaluating, and modifying emotional experiences and/or expressions to accomplish one's goals (Nigg, 2017). Conversely, emotional dysregulation (ED) can be defined as a failure to regulate emotions resulting in emotional experiences or expressions that interfere with appropriate goal-directed activity (Beauchaine and Cicchetti, 2019; Thompson, 2019). Regulation does not only affect discrete emotions experienced but also emotion dynamics, including intensity, range, and temporal features, such as rise or recovery time, persistence, and lability (Thompson, 1994).

While some broadly acknowledged theoretical models emphasize different aspects of emotional regulation, such as top-down emotional control (Ochsner and Gross, 2005) or awareness, understanding, and acceptance of emotions (Gratz and Roemer, 2004), operational definitions of ED in psychiatric literature typically encompass four core attributes: oscillation of affect, emotional intensity, regulation capacity

* Corresponding author at: Psychiatry Department, University of Pisa, Via Roma 67, 56100 Pisa, Italy.
E-mail address: giulio.perugi@med.unipi.it (G. Perugi).

https://doi.org/10.1016/j.jad.2024.03.167
Received 28 December 2023; Received in revised form 27 March 2024; Accepted 29 March 2024
Available online 2 April 2024
0165-0327/© 2024 Published by Elsevier B.V.

over experiences and behavior, and reactivity to external triggers (Marwaha et al., 2013b). At least four kinds of ED have been proposed in relation to psychopathology and include: a) ineffective regulatory attempts resulting in enduring negative emotions; b) emotional expressions interfering with appropriate behavior; c) context-inappropriate emotional experiences or expressions; d) emotions changing too slowly or too fast (Cole et al., 2017). Compared to other models, these latter have the advantage of referring to observed behaviors or subjective experiences easily identifiable by patients.

ED is currently considered a transdiagnostic psychopathological feature with significant theoretical and clinical implications (Aldao et al., 2016; Carver et al., 2017; England-Mason, 2020; Sloan et al., 2017). Deficits of emotional regulation have been documented in adult samples with several psychiatric conditions, including mood (Miola et al., 2022; Visted et al., 2018), anxiety (Cisler and Olatunji, 2012), stress-related (McLean and Foa, 2017), substance use (Stellern et al., 2023), personality (Daros and Williams, 2019), and neurodevelopmental disorders, such as ADHD (Beheshti et al., 2020; Faraone et al., 2018) and autism spectrum disorders (Mazefsky, 2015). Unfortunately, specific clinician-rated operational criteria to identify adults with prominent ED in clinical settings have been formulated only for patients with adult ADHD. Consequently, the assessment of the prevalence and correlates of ED in adults with other psychiatric conditions or in epidemiological samples has been mostly based on self-reported measures or on facets included in different psychiatric conditions.

As for adult ADHD, data from multiple pharmacological trials provided strong support for the validity and utility of distinguishing a specific subtype showing prominent ED symptoms based on clinical ratings of three domains comprised among the so-called Utah criteria (Wender, 1998), namely problems with temper control and explosive outbursts, affective lability, and emotional over-reactivity or stress intolerance. Notably, the domains employed closely align with definitions of ED focusing on emotional dynamics, regulation capacity over expression, and reactivity to external triggers. Particularly, moderate impairment on at least two domains was found to clinically distinguish the ED presentation (Reimherr et al., 2015, 2020).

Various self-report psychometric instruments have been developed to quantify the severity of ED and related constructs. In a recent systematic review of questionnaires assessing ED in children and adolescents, researchers found that more than half of the studies relied on a pool of five measures (Freitag et al., 2023). A similar systematic review in adult clinical populations identified nine self-report questionnaires that had undergone psychometric validation (Marwaha et al., 2013b). In both studies, no cut-off score was found for any of the measures. Other instruments, including brief questionnaires for large-scale studies, have been developed in epidemiological samples, but even in this case no threshold was reported (Bradley et al., 2011; Powers et al., 2015). To the best of our knowledge, only a recent study conducted in adults with ADHD determined a cut-off score for the Barkley ED Scale to distinguish patients with high-level deficient emotional self-regulation (Biederman et al., 2020). However, items included in the scale explore a limited range of ED symptoms mostly related to temper control.

The Reactivity, Intensity, Polarity and Stability questionnaire represents a useful self-report tool to quantify different facets of ED both in psychiatric patients and healthy subjects (Hantouche, 2014). The recently validated a 40-items version of the scale (RIPoSt-40) includes four subscales measuring affect oscillation over time (affective instability), tendency for intense and frequent negative and positive feelings (negative and positive emotionality), and inability to regulate impulsive behavioral responses to emotional stimuli (emotional impulsivity) (Brancati et al., 2019). While not exploring access to or preference for specific emotion regulation strategies, RIPoSt-40 focuses on a wide range of emotional symptoms experienced by patients with difficulties in emotional regulation. It has been applied to adults with ADHD and/or cyclothymic disorder (Brancati et al., 2023b; Brancati et al., 2021; Pallucchini et al., 2021; Quaranta et al., 2020; Spera et al., 2020), inpatients with mood disorders, schizophrenia spectrum disorders, and personality disorders (Rigucci et al., 2021), and bariatric candidates with or without eating disorders (Barbuti et al., 2021, 2023). The scale has also been used in adolescents with and without psychiatric conditions, where it showed significant positive correlations with the Child Behavior Checklist-Dysregulation Profile, a commonly employed indirect measure of ED (Masi et al., 2021).

In this study, we aimed to develop a self-report screening instrument for clinically significant ED (CSED) based on a subset of RIPoSt-40 items. Patients with non-psychotic conditions were recruited in a tertiary-level clinic specialized in mood, anxiety, and neurodevelopmental disorders, a setting likely to be enriched in patients with CSED. Clinician-rated criteria for CSED were defined a priori based on the approach suggested in adults with ADHD (Reimherr et al., 2020). Prevalence and correlates of CSED were preliminarily investigated to test the validity of criteria. Self-reported affective instability rates of 26–58 % had been previously found in community-based centers (Melartin et al., 2009; Zimmerman et al., 2019) and it has been estimated that 40–60 % of those with depression, anxiety, post-traumatic stress and obsessive-compulsive disorder from the general population suffers from mood instability (Broome et al., 2015; Marwaha et al., 2013a). Given both our setting and the narrower definition employed, we expected similar rates of CSED in our sample. We also hypothesized CSED to be associated with so-called "minor" mood disorders, such as cyclothymia (Perugi et al., 2016), and neurodevelopmental disorders, mostly ADHD (Beheshti et al., 2020; Faraone et al., 2018), as well as with higher severity and comorbidity rates (Bayes et al., 2016; Corbisiero et al., 2017; Perugi et al., 1999, 2011; Quenneville et al., 2022; Reimherr et al., 2017), and higher scores on RIPoSt-40 subscales.

2. Materials and methods

2.1. Recruitment and assessment

According to a naturalistic approach, 150 adult patients (≥18 years) attending the Outpatient Service of the Second Psychiatry Unit of Santa Chiara University Hospital (Pisa) were enrolled between February 2023 and July 2023. All subjects provided written, informed consent for data collection to be analyzed and presented anonymously in aggregate form. The study was carried out in accordance with The Code of Ethics of the World Medical Association (Declaration of Helsinki).

No specific inclusion criteria were required, and all patients being able to fill in paper-and-pencil self-report questionnaire were considered eligible. The following criteria were exclusionary: history of or current psychosis (delusions, hallucinations, grossly disorganized thought or behavior); current major mood episodes (major depression, mania, hypomania) according to DSM-5; intellectual disability according to DSM-5; any neurological condition preventing adequate comprehension and completion of self-report questionnaires (e.g., neurocognitive disorders, traumatic brain injury, stroke). Patients currently experiencing major mood episodes were excluded to ensure that the assessment of ED reflected a trait condition, unaffected by state-related symptoms of ED observed across different mood phases.

All participants were asked to fill in 30 items from RIPoSt-40 summing up into the negative emotion dysregulation (NED) score (Brancati et al., 2019). Items from the positive emotionality subscale were discarded based on the absence of significant differences between patients with ED-related conditions and non-clinical controls on this domain (Brancati et al., 2019). Items were rated on a Likert scale ranging from 1 = Never to 6 = Always.

All patients were evaluated by psychiatric trainees with at least two years of experience under senior psychiatrist supervision. Age, sex and clinical anamnestic data (major psychiatric conditions and current pharmacological treatment) were entered in a predefined form. Lifetime diagnoses of neurodevelopmental disorders, mood disorders, anxiety disorders, substance use disorders, and eating disorders were

specifically assessed and reported. Other major psychiatric conditions (e.g., obsessive-compulsive disorder or stress-related disorders) were also recorded.

All psychiatric conditions were diagnosed according to DSM-5, except for cyclothymic disorder, where only criteria A-B and D-G were required. Criterion C was not applied as reported in DSM-5: specifically, while a history of mania was considered exclusionary, a lifetime history of major depressive or hypomanic episodes was allowed. In line with previous observations underlining course heterogeneity in mood disorders (Brancati et al., 2023c; Koukopoulos et al., 2006; Perugi and Akiskal, 2002) and with previous studies from our group (Brancati et al., 2023b; Brancati et al., 2019, 2021), this approach highlighted the occurrence of frequent mood shifts and chronic affective symptoms associated with significant distress and impairment in patients otherwise diagnosed with major depression or bipolar disorder type 2.

2.2. CSED criteria

CSED criteria were formulated for this study based on criteria proposed by Reimherr et al. (2020). Presence of three different facets of ED derived from the Utah criteria for ADHD, namely hot temper/explosive short-lived outbursts, affective lability, and emotional over-reactivity (Wender, 1998), and a severity measure of overall ED were considered (see Appendix A).

All criteria were rated, under senior psychiatrist supervision, by psychiatric trainees with at least two years of experience who were responsible for the patient's care. Prompt questions included in the Wender-Reimherr Adult Attention Deficit Disorder Scale (WRAADDS) were routinely used to assess ED. WRAADDS has been in use at our center since 2019 (Barbuti et al., 2021), and the validation study of its Italian version is currently under preparation by our group.

Definitions included in the Utah criteria were used to guide clinicians to establish whether any ED qualitative criteria were present for each patient. Hot temper/explosive short-lived outbursts (criterion A1) required transient loss of control, being easily provoked or constantly irritable, and temper problems interfering with personal relationships. Affective lability (A2) was defined by shifts from normal mood to depressed mood or excitement, usually lasting hours to at most a few days. Emotional over-reactivity (A3) required being unable to take ordinary stresses in stride and emotional responses interfering with problem solving. Qualitative criteria referred to ED as a trait and their rating was based, whenever possible, on multiple observations to exclude significant contributions of affective episodes or other major psychiatric conditions. External informant reports obtained through unstructured interviews were also taken in consideration whenever available.

Severity of ED was rated with a score from 1 to 7, with anchor points based on the Clinical Global Impression-Severity of Illness scale (Guy, 1976), hereafter referred to as Clinical Global Impression-ED (CGI-ED) severity. Scores were assigned as follows: 1 = Normal, not at all ill; 2 = Borderline ill; 3 = Mildly ill; 4 = Moderately ill; 5 = Markedly ill; 6 = Severely ill; 7 = Among the most extremely ill patients. Since several factors (e.g., supportive/demanding environment, pharmacological treatments, substance use, interpersonal triggers) could influence the severity of ED and its impact on global functioning, this evaluation was based on the single consultation during which the self-reported questionnaire was completed.

CSED was considered present whenever at least two out of three facets of ED were present (criterion A) and ED severity scored at least 4 out of 7, i.e., moderately to extremely severe (criterion B). The presence of at least two facets and moderate severity was required in accordance with Reimherr et al. (2020). Notably, the occurrence of a single facet could be hardly distinguished from symptoms as central to the diagnosis of other disorders, such as short-lived outbursts in impulse control disorders or affective lability in cyclothymic disorder, or akin to those reported in other conditions, such as emotional over-reactivity in generalized anxiety disorder. As for severity, the choice to include patients showing moderate severity assumed that pharmacological treatment already established in most of participants could have potentially dampened ED severity. More conservative severity threshold could be considered in future studies.

Inter-rater reliability was obtained for 23 participants by independent raters, i.e., other psychiatric trainees with at least two years of experience who were co-responsible for the patient's care. Excellent agreement was found for the identification of CSED (Cohen's $k = 0.82$), as well as for the evaluation of current ED severity using the CGI-ED (Spearman's $r = 0.83$, $p < 0.001$).

2.3. Statistical analysis

All the statistical analyses were performed using R Statistical Software (Foundation for Statistical Computing, Vienna, Austria). Descriptive statistics were used to summarize demographic and clinical characteristics of the sample. Pairwise associations between CSED criteria were tested using Pearson's chi-squared test and Wilcoxon rank-sum test. Odds ratios (OR) with 95 % confidence interval (CI) and standardized mean difference (SMD) were reported. Comparative analyses testing differences between patients with and without CSED were conducted using Pearson's chi-squared tests (or Fisher's exact test) for categorical variables, and Wilcoxon rank-sum test for continuous variables. Shapiro-Wilk test was used to exclude normality of continuous variables. Pairwise Fisher's exact tests were used as post-hoc analyses, applying false discovery rate correction. A statistical significance threshold of $p < 0.05$ was set in all the analyses. Supplementary analyses tested: 1) differences of subjects respectively with criterion A1, A2 and A3 vs. those without; 2) differences between patients with and without CSED within participants with mood, anxiety or neurodevelopmental disorders (see Supplementary material).

To develop the screening version of the Reactivity, Intensity, Polarity, and Stability questionnaire (RIPoSt-SV), a decision tree algorithm was trained and tested using the *mlr* package in R. The model's target was the presence of CSED, with all 30 items from RIPoSt-40, completed by participants, included as predictors. We divided the dataset into two separate subsets: a training set and a testing set, utilizing the *groupdata2* package in R. The data splitting was performed in a stratified manner, based on the treating clinicians responsible for assessing CSED criteria. The training set comprised 120 subjects (80 % of the total dataset). The remaining 30 subjects (20 %) were allocated to the testing set (for set characteristics see Supplementary material).

The training set was used for tuning the hyperparameters of the decision tree through a 5-fold cross-validation process employing grid search. The hyperparameters subject to optimization included: *maxdepth*, the maximum allowable depth for each individual decision tree within the ensemble; *minsplit*, the minimum number of observations required in a node before the algorithm considers further node splitting; and *cp*, complexity parameter, a positive numeric value influencing the cost of adding new nodes to the tree. Candidate values explored ranged from 1 to 20 for *maxdepth*, 1 to 20 for *minsplit*, and 0.001 to 0.01 for *cp*.

The performance of the decision tree at each combination of hyperparameters was evaluated using accuracy, defined as the proportion of correctly classified observations relative to the total number of observations. The set of hyperparameters that maximized the mean accuracy during cross-validation was identified as the optimal configuration. Subsequently, the best model was applied to the testing set to evaluate its generalization performance. A minimum accuracy of 80 % in the testing set was deemed acceptable. Accuracy, sensitivity, specificity, positive predictive value, and negative predictive value were computed both in the training set and in the testing set.

3. Results

3.1. Sample characteristics

The sample was composed of 150 patients, with age comprised between 18 and 77 years (mean ± SD = 38.25 ± 16.13 years) and slight preponderance of female sex (N = 85, 56.7 %) (Table 1). Mood disorders, anxiety disorders and neurodevelopmental disorders represented the most common diagnoses. Stress-related conditions were underrepresented (N = 4, 2.7 %). While most patients were taking psychopharmacological treatments at study entry (N = 136, 90.7 %), 14 subjects were evaluated off-treatment (9.3 %). The prevalence of each psychopharmacological treatment was evaluated excluding those presenting without treatment.

Table 1
Characteristics of the sample (N = 150). Abbreviations: ED = emotional dysregulation; CSED = clinically significant emotional dysregulation; IQR = interquartile range; NOS = not otherwise specified; RIPoSt-40 = Reactivity, Intensity, Polarity and Stability questionnaire, 40-item version.

Variables	N (%)/median [IQR]
Sex (male)	65 (43.3)
Age (years)	34.50 [24.00, 52.00]
Mood disorders	
Any mood disorder	119 (79.3)
Bipolar disorder type 1	5 (3.3)
Bipolar disorder type 2	54 (36.0)
Cyclothymic disorder	42 (28.0)
Bipolar disorder NOS	13 (8.7)
Major depressive disorder	4 (2.7)
Persistent depressive disorder	1 (0.7)
Anxiety disorders	
Any anxiety disorder	72 (48.0)
Panic disorder	42 (28.0)
Generalized anxiety disorder	18 (12.0)
Social anxiety disorder	13 (8.7)
Neurodevelopmental disorders	
Any neurodevelopmental disorder	59 (39.3)
Attention-deficit/hyperactivity disorder	56 (37.3)
Autism spectrum disorder	10 (6.7)
Substance use disorders	
Any substance use disorder	32 (21.3)
Alcohol use disorder	14 (9.3)
Cocaine use disorder	5 (3.3)
Cannabis use disorder	12 (8.0)
Other psychiatric conditions	
Any eating disorder	23 (15.3)
Anorexia nervosa	6 (4.0)
Bulimia nervosa	4 (2.7)
Binge-eating disorder	12 (8.0)
Obsessive-compulsive disorder	15 (10.0)
Number of psychiatric conditions	2.00 [1.00, 3.00]
Pharmacological treatment	
Lithium salts	71 (52.2)
Anticonvulsant mood stabilizers	72 (52.9)
Gabapentin or pregabalin	28 (20.6)
Antidepressants	68 (50.0)
Antipsychotics	39 (28.7)
Benzodiazepines or *Z*-drugs	20 (14.7)
Methylphenidate	26 (19.1)
CSED criteria	
Clinical Global Impression - ED severity	4.00 [3.00, 4.00]
Hot temper, explosive short-lived outbursts	68 (45.3)
Affective lability	105 (70.0)
Emotional over-reactivity	114 (76.0)
Number of qualitative criteria	
None	15 (10.0)
One	29 (19.3)
Two	60 (40.0)
Three	46 (30.7)
CSED criteria satisfied	75 (50.0)
RIPoSt-40 subscales	
Negative emotion dysregulation	96.00 [81.25, 121.00]
Affective instability	35.00 [29.00, 47.00]
Negative emotionality	37.00 [30.00, 44.00]
Emotional impulsivity	25.00 [19.00, 31.00]

Additional sociodemographic variables and CGI-Severity scores were obtained from clinical charts of a subsample (N = 88; age: median [IQR] = 31.50 [23.00, 52.00], range = 18–77, mean ± SD = 37.62 ± 16.57 years; 43 females, 48.9 %). As for marital status, 55 (62.5 %) participants had never been married, 24 were currently married (27.3 %), 7 were separated/divorced (8.0 %), and 2 were widows (2.3 %). Regarding education, 16 participants had a graduate degree or higher (18.2 %), 56 had a high school diploma (63.6 %), and 16 had a lower level of education (18.2 %). Concerning employment status, 22 (25.0 %) participants were unemployed, 37 (42.1 %) were employed, 22 (25.0 %) were students, and 7 (8.0 %) were retired. All participants were of European descent, except for two individuals who were respectively of South American and North African descent. CGI-Severity was, on average, 3.7 ± 1.12 (median [IQR] = 4.00 [3.00, 4.00]; range = 2–6).

3.2. CSED criteria

CSED criteria were satisfied in half of the sample (N = 75, 50.0 %). Criterion A3 was the most endorsed (N = 114, 76.0 %). While criterion A2 was slightly less common (N = 105, 70.0 %), criterion A1 applied to less than half of participant (N = 68, 45.3 %). CGI-ED severity was, on average, 3.5 ± 1.21 (median [IQR] = 4.00 [3.00, 4.00]; range = 1–6). Significant overlap between facets listed under criterion A for CSED was found (Fig. 1).

Criterion A2 was significantly associated with both criterion A1 (OR = 2.32, 95%CI = 1.12–4.99, $\chi^2 = 4.46$, $p = 0.035$) and criterion A3 (OR = 3.74, 95%CI = 1.70–8.36, $\chi^2 = 10.32$, $p = 0.001$). Conversely, the association between criterion A1 and criterion A3 was not statistically significant (OR = 1.91, 95%CI = 0.88–4.33, $\chi^2 = 2.15$, $p = 0.142$). Significantly higher CGI-ED severity was observed in participants who satisfied, respectively, criterion A1 (SMD = 0.638, $p < 0.001$), A2 (SMD = 0.996, $p < 0.001$), and A3 (SMD = 1.222, p < 0.001) compared to those who did not.

All criteria A were significantly associated with the presence of CSED, with a lower contribution of criterion A1 (OR = 2.95, 95%CI = 1.54–5.92, $\chi^2 = 9.71$, $p = 0.002$) compared to A2 (OR = 12.01, 95%CI = 4.93–34.49, $\chi^2 = 32.51$, p < 0.001) and A3 (OR = 7.43, 95%CI =

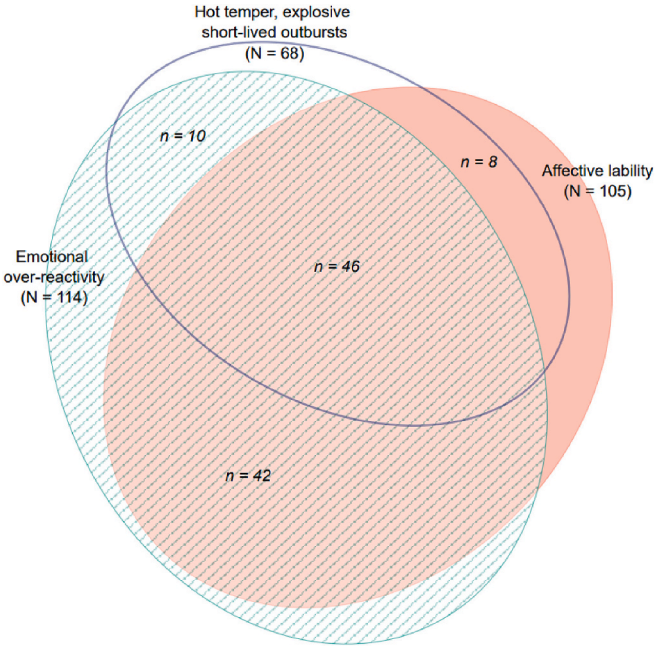

Fig. 1. Patterns of overlap between facets listed under criterion A. "N" is used to indicate the number of participants satisfying each of the three criteria; "n" indicates the sample size of groups of participants with two or three criteria.

3.02–21.40, $\chi^2 = 19.33$, $p < 0.001$). Criterion A1 was endorsed in 44 (58.7 %) of those with CSED vs. 24 (32.0 %) of those without. Criteria A2 and A3 were both found in 69 (92.0 %) with CSED, respectively vs. 36 (48.0 %) and 45 (60.0 %) of those without.

3.3. Comparative analyses

Significant differences were observed between patients with and without CSED (Table 2). Patients with CSED showed significantly lower age, more mood disorders, neurodevelopmental disorders, ADHD, substance use disorders, cannabis use disorder, and eating disorders, less anxiety disorders and panic disorder, a higher overall number of psychiatric conditions and higher scores on RIPoSt-40.

When grouping patients with mood disorders into those with bipolar disorder type 1 or 2 (BD) and those with cyclothymia or other mood disorders patients with CSED were more frequently diagnosed with BD (pairwise Fisher's $p = 0.001$, $p_{adj} = 0.002$) or other mood disorders than without mood disorders ($p < 0.001$, $p_{adj} < 0.001$). Moreover, cyclothymia or other mood disorders were significantly more common in those with ED than BD ($p = 0.009$, $p_{adj} = 0.009$).

Regarding psychopharmacological treatments, lithium salts and methylphenidate were employed significantly more often in those with CSED than in those without, while the opposite was observed for antidepressants.

Finally, CSED was associated with a higher CGI-Severity (SMD = 1.12, $p < 0.001$) and CGI-Severity and CGI-ED were moderately correlated (Spearman's $r = 0.50$, $p < 0.001$; $N = 88$).

3.4. RIPoSt-SV development

To develop RIPoSt-SV, we trained a decision tree algorithm using a dataset comprising 120 subjects and tested it on the remaining 30 subjects. After hyperparameter tuning, we identified the optimal settings: *maxdepth* = 4; *minsplit* = 16; and *cp* = 0.006. Utilizing these hyperparameters, the model achieved a mean accuracy of 75 % on 5-fold cross-validation samples.

The decision tree obtained is illustrated in Fig. 2, and the corresponding RIPoSt-SV form and scoring sheet can be found in Appendix B. The root node of the decision tree is based on the response to item 40 ("I'm so unstable that I am unable to manage long-term projects") from RIPoSt-40. If a response of 3 or higher is obtained, we consider the response to item 4 ("I have very strong reactions to things that touch my emotions"). At this level, a response of 1 or 2 excludes a positive screening for ED. When a response of 3 or higher is obtained, we further consider the response to item 32 ("I tend to feel things in a very intense way or, conversely, with great indifference"). If a response of 4 or higher is obtained, it indicates a positive screening for ED; otherwise, we consider the response to item 27 ("I tend to worry about everything"). At this level, a response of 1 or 2 indicates a positive screening for ED, while a response of 3 or higher excludes a positive screening. Conversely, when a response of 1 or 2 is obtained at the root node, we consider the response to item 36 ("From one day to the next, I can be sociable, a 'ringleader,' or isolated, alone, closed in on myself"). If a response of 4 or higher is obtained, it indicates a positive screening for ED; otherwise, we consider the response to item 3 ("I tend to get nervous immediately, or quickly react when I'm frustrated"). At this level, a response of 5 or 6 indicates a positive screening for ED, while a response of 4 or lower excludes a positive screening.

In both the complete training set and the testing set (Table 3), all performance metrics, including accuracy, sensitivity, specificity, positive predictive value, and negative predictive value, were equal to or >80 %. With an accuracy of 83.3 % in the testing set, we considered the selected decision tree suitable for screening purposes.

Table 2
Differences between patients with and without clinically significant emotional dysregulation (CSED). Abbreviations: CSED = clinically significant emotional dysregulation; IQR = interquartile range; RIPoSt-40 = Reactivity, Intensity, Polarity and Stability questionnaire, 40-item version; SMD = standardized mean difference.

	With CSED (N = 75)	Without CSED (N = 75)			
	N (%) / median [IQR]	N (%) / median [IQR]	χ^2	SMD	p
Sex (male)	28 (37.3)	37 (49.3)	1.74	0.244	0.187
Age (years)	26.00 [22.00, 42.00]	47.00 [28.00, 57.00]		0.791	<0.001
Mood disorders					
Any mood disorder	71 (94.7)	48 (64.0)	19.68	0.818	<0.001
Mood disorders			28.48	0.968	<0.001
Bipolar disorder type 1 or 2	28 (37.3)	31 (41.3)			
Cyclothymia or other mood disorders	43 (57.3)	17 (22.7)			
Without mood disorders	4 (5.3)	27 (36.0)			
Anxiety disorders					
Any anxiety disorder	29 (38.7)	43 (57.3)	4.51	0.380	0.034
Panic disorder	14 (18.7)	28 (37.3)	5.59	0.425	0.018
Generalized anxiety disorder	5 (6.7)	13 (17.3)	3.09	0.333	0.079
Social anxiety disorder	10 (13.3)	3 (4.0)	3.03	0.336	0.082
Neurodevelopmental disorders					
Any neurodevelopmental disorder	45 (60.0)	14 (18.7)	25.14	0.934	<0.001
Attention-deficit/ hyperactivity disorder	43 (57.3)	13 (17.3)	23.96	0.908	<0.001
Autism spectrum disorder	7 (9.3)	3 (4.0)	0.96	0.215	0.326
Substance use disorders					
Any substance use disorder	25 (33.3)	7 (9.3)	11.48	0.613	0.001
Alcohol use disorder	9 (12.0)	5 (6.7)	0.71	0.184	0.400
Cocaine use disorder	4 (5.3)	1 (1.3)		0.224	0.367
Cannabis use disorder	10 (13.3)	2 (2.7)	4.44	0.401	0.035
Other psychiatric conditions					
Any eating disorder	17 (22.7)	6 (8.0)	5.14	0.416	0.023
Anorexia nervosa	5 (6.7)	1 (1.3)		0.275	0.209
Bulimia nervosa	3 (4.0)	1 (1.3)		0.166	0.620
Binge-eating disorder	8 (10.7)	4 (5.3)	0.82	0.198	0.367
Obsessive-compulsive disorder	6 (8.0)	9 (12.0)	0.30	0.134	0.586
Number of psychiatric conditions	3.00 [2.00, 3.00]	2.00 [1.00, 2.00]		0.993	<0.001
Pharmacological treatment					
Lithium salts	49 (72.1)	22 (32.4)	19.92	0.866	<0.001
Anticonvulsant mood stabilizers	39 (57.4)	33 (48.5)	0.74	0.177	0.390
Gabapentin or pregabalin	12 (17.6)	16 (23.5)	0.40	0.146	0.525
Antidepressants	21 (30.9)	47 (69.1)	18.38	0.828	<0.001
Antipsychotics	19 (27.9)	20 (29.4)	0	0.033	1.000
Benzodiazepines or Z-drugs	9 (13.2)	11 (16.2)	0.06	0.083	0.809
Methylphenidate	20 (29.4)	6 (8.8)	8.04	0.542	0.005
RIPoSt-40 subscales					
Negative emotion dysregulation	117.00 [95.50, 133.50]	86.00 [76.50, 96.50]		1.168	<0.001
Affective instability	45.00 [36.00, 57.00]	31.00 [25.00, 35.00]		1.312	<0.001

(*continued on next page*)

Table 2 (*continued*)

	With CSED (N = 75)	Without CSED (N = 75)			
	N (%) / median [IQR]	N (%) / median [IQR]	χ^2	SMD	p
Negative emotionality	42.00 [33.50, 48.00]	35.00 [28.00, 38.50]		0.639	<0.001
Emotional impulsivity	27.00 [23.50, 34.00]	20.00 [15.00, 27.00]		0.954	<0.001

4. Discussion

In the current study, we introduced the RIPoSt-SV, a self-report instrument designed to identify CSED within clinical samples. Our study comprised 150 adult patients seeking treatment for non-psychotic disorders. CSED was identified based on predefined criteria, following the approach proposed in adults with ADHD by Reimherr et al. (2020). The diagnosis required a moderate level of impairment and the presence of at least two of the following domains: hot temper, affective lability, and emotional over-reactivity. To the best of our knowledge, this study represents the first attempt to clinically categorize patients for CSED across a diverse sample of individuals with various psychiatric conditions.

In accordance with our hypothesis based on previous studies on affective instability assessed using self-reports to single questions included in the assessment of personality disorders (Broome et al., 2015; Marwaha et al., 2013a; Melartin et al., 2009; Zimmerman et al., 2019), CSED was found in half of the sample. Several associations between CSED and clinical features also confirmed our initial hypotheses. CSED was associated with a higher severity, a higher overall number of psychiatric conditions and a higher prevalence of mood disorders, particularly cyclothymia or other minor mood disorders, and neurodevelopmental disorders, particularly ADHD. Patients with CSED also showed lower age, in accordance with the categorization of ED within the neurodevelopmental domain. In addition, higher rates of substance use disorders, cannabis use disorders, and eating disorders, and lower rates of anxiety disorder and panic disorders were found in those with CSED.

Furthermore, patients with CSED received more frequent treatment with lithium salts and methylphenidate, while antidepressant use was less common. These results may depend on the large overlap between CSED and bipolar spectrum disorders and ADHD in our sample. However, they also align with evidence supporting the effectiveness of lithium for chronic affective symptoms (Akiskal, 1994; Dorrego et al., 2002; Perugi et al., 2016; Peselow et al., 1981; Stone, 2022), as well as the efficacy of stimulants in addressing ED in ADHD (Brancati et al., 2023a; Lenzi et al., 2018). Conversely, affective instability and cyclothymic temperament have been shown to predispose patients to negative outcomes and treatment complications when receiving antidepressants in the context of mood disorders (Akiskal, 1994; Akiskal et al., 2005; Barbuti et al., 2017; De Aguiar Ferreira et al., 2014; Koukopoulos et al., 2003, 2005; Perugi et al., 2013).

RIPoSt-SV was developed as a decision tree algorithm based on six items selected from RIPoSt-40. All performance metrics were equal to or >80 %. Given the accuracy of 83.3 % in a separate testing set, the questionnaire was considered adequate for screening purposes and seems suitable for recruitment of non-psychotic patients in studies on ED conducted in tertiary-level clinics. Interestingly, the items selected reflect different facets of ED and shed light on meaningful features characterizing patients with CSED compared to those without.

The most important item, the root node of the tree (item 40), was originally included in the affective instability subscale from RIPoSt-40 and reflects the impact of affective instability on long-term planning. The presence of high scores on two additional items, who relate to increased emotional intensity (item 4, emotional impulsivity subscale) and variability of emotional reactions (item 32, affective instability subscale), confirms CSED. When only increased emotional intensity is found, an additional item (item 27), the one with strongest load on the negative emotionality subscale in the original validation study, is

Table 3
RIPoSt-SV classification performance in training ($N = 120$) and testing set ($N = 30$).

	Training set	Testing set
Accuracy (%)	86.7	83.3
Sensitivity (%)	90.0	80.0
Specificity (%)	83.3	86.7
Positive predictive value (%)	84.4	85.7
Negative predictive value (%)	89.3	81.3

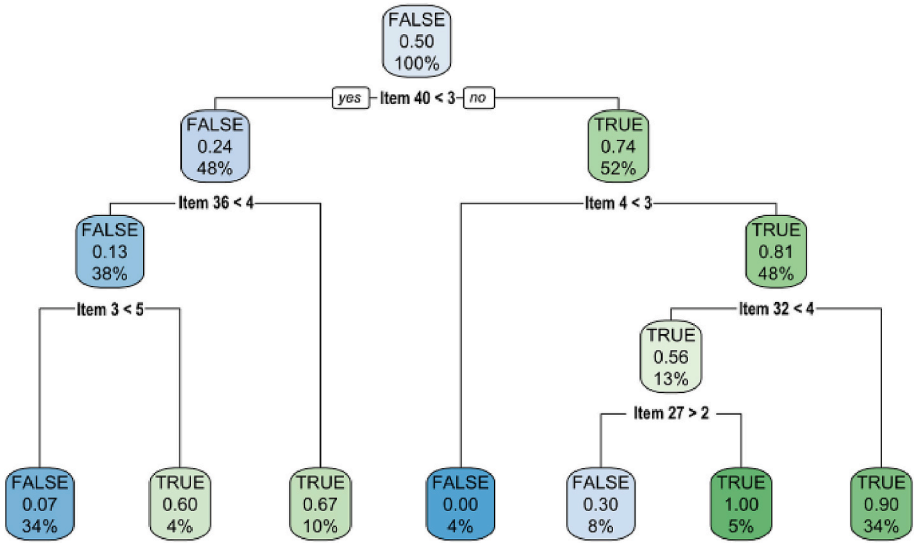

Fig. 2. Decision tree plot for the prediction of clinically significant emotional dysregulation (CSED) based on items from to the Reactivity, Intensity, Polarity and Stability questionnaire (RIPoSt-40). For each node the proportion of subjects diagnosed with ED and the percentage of subjects from the whole sample included in the node are shown.

considered. and assessed (item 27). While higher scores were associated with a positive screening for CSED for all the other items, in this case higher scores, indicating proneness to generalized anxiety, excluded CSED. This finding may reflect the tendency toward overvaluation of oneself subjective emotional symptoms, especially in patients diagnosed with anxiety disorders that were not recognized by clinicians as having CSED. Accordingly, reports based on hierarchically more important items in the decisions tree may have been inflated and should be taken with caution whenever elevated tendency to worry is reported.

When affective instability is not reported to have a significant impact on long-term plans, two additional items are considered. The first one reflects social consequences of affective instability (item 36, affective instability subscale). Whenever usual social behavior is reported to be unstable, the presence of CSED is suggested, even in absence of long-term impact of affective instability. Alternatively, the last item, that originally showed the strongest loading on the emotional impulsivity subscale, is considered. The item relates to the rapidity of onset of emotional responses when under stress (item 3). Almost constantly increased rapidity of onset indicates a positive screening for CSED, even if no long-term impact of mood swings and rather consistent social behavior are reported.

4.1. Limitations

We need to acknowledge several limitations in our study. First, our sample was drawn from a tertiary-level clinic specialized in mood, anxiety, and neurodevelopmental disorders. While this setting was appropriate for studying ED, it is important to recognize that our findings may not be broadly applicable due to selection bias. Particularly, half of our sample was likely composed of patients with at least moderate severity. Our results might not extend to primary- or secondary-level settings, where milder forms of ED might be more prevalent. Consequently, it is prudent to consider RIPoSt-SV as a valid research instrument, but we need additional clinical studies in diverse settings to fully appreciate its clinical value.

Importantly, criteria for CSED were specifically formulated for this study, drawing from previous research on adult ADHD. Given the absence of alternative clinician-rated criteria in the literature, future studies should focus on evaluating the longitudinal validity of these criteria, especially in patients without ADHD.

The exclusion or the underrepresentation of different groups, instead, may also limit the generalizability of our findings. Racial minorities were underrepresented in our participant pool. This, in part, reflects the racial demographics of the communities where data were collected. However, the challenge of recruiting these groups is pervasive in psychiatry and can only be addressed through deliberate efforts to increase access to mental health care. The exclusion of patients with psychotic conditions also prevents from instrument's application to patients with bipolar disorder who have experienced psychotic symptoms during manic or depressive phases. Nevertheless, the concept of ED appears to be more relevant and clinically significant in patients with softer bipolar spectrum disorders, showing less pronounced severity of episodes, but higher levels of chronicity and comorbidity. Patients with current mood episodes were also excluded. While this choice was justified by the intention to measure ED as a trait condition, it seems reasonable to investigate whether the instrument could also be applied to patients with current major depression. Similarly, given the very low prevalence of stress-related conditions in our sample and the relevance of ED in this context, the examination of the applicability of our screening tool in patients with post-traumatic stress disorder remains to be elucidated.

One additional limitation lies in the focus on the dysregulation of negative emotions compared to positive ones. Particularly, items from RIPoSt-40 positive emotionality subscale were discarded based on the absence of significant differences between patients and controls (Brancati et al., 2019). The assessment of the dysregulation of positive emotions using self-report tools in psychiatric settings raises several issues. While social desirability might lead to overestimation of positive emotion reports, there is often a lack of insight into the dysfunctional consequences of positive emotionality. Nevertheless, four items finally included in RIPoSt-SV focused on affective instability and emotion dynamics, such as emotional intensity or its variability, and were not associated with a specific affective valence. Two items, instead, addressed negative affective states: one examined the rapid onset of emotional responses under stress, while the other explored susceptibility to anxiety. However, only the first was associated with a positive screening, while the latter showed an inverse association with CSED. In future studies, the concurrent validity of RIPoSt-SV with tools assessing positive ED merit further investigation.

Finally, other facets of ED that are independent from affect valence such as use or preference of specific emotion regulation strategies, awareness, understanding, and acceptance of emotions are not assessed by the RIPoSt-40 questionnaire. The alignment between our screening instrument and measures examining these aspects, such as the Difficulties in Emotion Regulation Scale (DERS) (Gratz and Roemer, 2004), will be explored in future studies.

5. Conclusions

In this study, we introduced a new self-report screening instrument for CSED, the RIPoSt-SV. This tool has proven to be quite effective in identifying CSED in a sample recruited from a tertiary-level clinic. It displayed accuracy, sensitivity, specificity, positive predictive value, and negative predictive value of 80 % or higher. RIPoSt-SV could thus be useful in patient selection for research and clinical studies. Subsequent studies will be required to validate its psychometric properties and expand its applicability to clinical practice.

Role of the funding source

The authors declare that no funds, grants, or other support were received during the preparation of this manuscript.

CRediT authorship contribution statement

Giulio Emilio Brancati: Writing – review & editing, Writing – original draft, Supervision, Investigation, Formal analysis, Data curation, Conceptualization. **Ugo De Rosa:** Investigation, Data curation. **Donatella Acierno:** Investigation, Data curation. **Valerio Caruso:** Investigation, Data curation. **Francesco De Dominicis:** Investigation, Data curation. **Alessandra Petrucci:** Investigation, Data curation. **Martina Moriconi:** Investigation, Data curation. **Camilla Elefante:** Investigation, Data curation. **Samuele Gemignani:** Investigation, Data curation. **Pierpaolo Medda:** Supervision, Data curation. **Elisa Schiavi:** Supervision, Data curation. **Giulio Perugi:** Writing – review & editing, Supervision, Conceptualization.

Declaration of competing interest

Prof. Perugi acted as consultant to Lundbeck, Angelini, FB-Health. He received a scholarship/research support from Lundbeck and Angelini. He is a member of the speaker/advisory board of Sanofi-Aventis, Lundbeck, FB-Health, Angelini. Other authors have no affiliation or financial interest in any organization that may constitute a conflict of interest.

Acknowledgments

We thank Federico Cortese from National Research Council of Italy for support and consultation on the statistical analyses conducted.

Declaration of generative AI in scientific writing

During the preparation of this work the authors used ChatGPT in order to revise English language. After using this tool/service, the authors reviewed and edited the content as needed and take full responsibility for the content of the publication.

Appendix A. Supplementary data

Supplementary data to this article can be found online at https://doi.org/10.1016/j.jad.2024.03.167.

References

Akiskal, H.S., 1994. Dysthymic and cyclothymic depressions: therapeutic considerations. J. Clin. Psychiat. 55 (Suppl), 46–52.

Akiskal, H.S., Benazzi, F., Perugi, G., Rihmer, Z., 2005. Agitated "unipolar" depression re-conceptualized as a depressive mixed state: implications for the antidepressant-suicide controversy. J. Affect. Disord. 85 (3), 245–258. https://doi.org/10.1016/j.jad.2004.12.004.

Aldao, A., Gee, D.G., De Los Reyes, A., Seager, I., 2016. Emotion regulation as a transdiagnostic factor in the development of internalizing and externalizing psychopathology: current and future directions. Dev. Psychopathol. 28 (4, 1, SI), 927–946. https://doi.org/10.1017/S0954579416000638.

Barbuti, M., Pacchiarotti, I., Vieta, E., Azorin, J.-M., Angst, J., Bowden, C.L., Mosolov, S., Young, A.H., Perugi, G., 2017. Antidepressant-induced hypomania/mania in patients with major depression: evidence from the BRIDGE-II-MIX study. J. Affect. Disord. 219, 187–192. https://doi.org/10.1016/j.jad.2017.05.035.

Barbuti, M., Carignani, G., Weiss, F., Calderone, A., Santini, F., Perugi, G., 2021. Mood disorders comorbidity in obese bariatric patients: the role of the emotional dysregulation. J. Affect. Disord. 279, 46–52. https://doi.org/10.1016/j.jad.2020.09.128.

Barbuti, M., Carignani, G., Weiss, F., Calderone, A., Fierabracci, P., Salvetti, G., Menculini, G., Tortorella, A., Santini, F., Perugi, G., 2023. Eating disorders and emotional dysregulation are associated with insufficient weight loss after bariatric surgery: a 1-year observational follow-up study. Eat. Weight Disord. 28 (1) https://doi.org/10.1007/s40519-023-01574-z.

Bayes, A., Parker, G., McClure, G., 2016. Emotional dysregulation in those with bipolar disorder, borderline personality disorder and their comorbid expression. J. Affect. Disord. 204, 103–111. https://doi.org/10.1016/j.jad.2016.06.027.

Beauchaine, T.P., Cicchetti, D., 2019. Emotion dysregulation and emerging psychopathology: a transdiagnostic, transdisciplinary perspective. Dev. Psychopathol. 31 (3), 799–804. https://doi.org/10.1017/S0954579419000671.

Beheshti, A., Chavanon, M.L., Christiansen, H., 2020. Emotion dysregulation in adults with attention deficit hyperactivity disorder: a meta-analysis. BMC Psychiat. 20 (1), 1–11. https://doi.org/10.1186/s12888-020-2442-7.

Biederman, J., DiSalvo, M., Woodworth, K.Y., Fried, R., Uchida, M., Biederman, I., Spencer, T.J., Surman, C., Faraone, S.V., 2020. Toward operationalizing deficient emotional self-regulation in newly referred adults with ADHD: a receiver operator characteristic curve analysis. Eur. Psychiat. 63 (1), e21 https://doi.org/10.1192/j.eurpsy.2019.11.

Bradley, B., DeFife, J.A., Guarnaccia, C., Phifer, J., Fani, N., Ressler, K.J., Westen, D., 2011. Emotion dysregulation and negative affect. J. Clin. Psychiat. 72 (05), 685–691. https://doi.org/10.4088/JCP.10m06409blu.

Brancati, G.E., Barbuti, M., Pallucchini, A., Cotugno, B., Schiavi, E., Hantouche, E.G., Perugi, G., 2019. Reactivity, intensity, polarity and stability questionnaire (RIPoSt-40) assessing emotional dysregulation: development, reliability and validity. J. Affect. Disord. 257 (July), 187–194. https://doi.org/10.1016/j.jad.2019.07.028.

Brancati, G.E., Barbuti, M., Schiavi, E., Colombini, P., Moriconi, M., Pallucchini, A., Maiello, M., Menculini, G., Perugi, G., 2021. Comparison of emotional dysregulation features in cyclothymia and adult adhd. Medicina (Lithuania) 57 (5), 1–13. https://doi.org/10.3390/medicina57050489.

Brancati, G.E., Acierno, D., Barbuti, M., Elefante, C., Gemignani, S., Raia, A., Perugi, G., 2023a. Revisiting stimulant use for emotional dysregulation in attention-deficit/hyperactivity disorder (ADHD). Expert. Rev. Neurother. 1–14 https://doi.org/10.1080/14737175.2023.2263645.

Brancati, G.E., De Rosa, U., De Dominicis, F., Petrucci, A., Nannini, A., Medda, P., Schiavi, E., Perugi, G., 2023b. History of childhood/adolescence referral to Speciality care or treatment in adult patients with attention-deficit/hyperactivity disorder: mutual relations with clinical presentation, psychiatric comorbidity and emotional dysregulation. Brain Sci. 13 (9), 1251. https://doi.org/10.3390/brainsci13091251.

Brancati, G.E., Nunes, A., Scott, K., O'Donovan, C., Cervantes, P., Grof, P., Alda, M., 2023c. Differential characteristics of bipolar I and II disorders: a retrospective, cross-sectional evaluation of clinical features, illness course, and response to treatment. *International Journal of*. Bipolar Disord. 11 (1) https://doi.org/10.1186/s40345-023-00304-9.

Broome, M.R., Saunders, K.E.A., Harrison, P.J., Marwaha, S., 2015. Mood instability: significance, definition and measurement. Br. J. Psychiatry 207 (4), 283–285. https://doi.org/10.1192/bjp.bp.114.158543.

Carver, C.S., Johnson, S.L., Timpano, K.R., 2017. Toward a functional view of the p factor in psychopathology. Clin. Psychol. Sci. 5 (5), 880–889. https://doi.org/10.1177/2167702617710037.

Cisler, J.M., Olatunji, B.O., 2012. Emotion regulation and anxiety disorders. Curr. Psychiat. Rep. 14 (3), 182–187. https://doi.org/10.1007/s11920-012-0262-2.

Cole, P.M., Hall, S.H., Hajal, N., 2017. Emotion dysregulation as a risk factor for psychopathology. In: Beauchaine, T.P., Hinshaw, S.P. (Eds.), Child and Adolescent Psychopathology, 3rd ed. Wiley & Sons, pp. 346–386.

Corbisiero, S., Mörstedt, B., Bitto, H., Stieglitz, R.D., 2017. Emotional dysregulation in adults with attention-deficit/hyperactivity disorder–validity, predictability, severity, and comorbidity. J. Clin. Psychol. 73 (1), 99–112. https://doi.org/10.1002/jclp.22317.

Daros, A.R., Williams, G.E., 2019. A meta-analysis and systematic review of emotion-regulation strategies in borderline personality disorder. Harv. Rev. Psychiat. 27 (4), 217–232. https://doi.org/10.1097/HRP.0000000000000212.

De Aguiar Ferreira, A., Vasconcelos, A.G., Neves, F.S., Correa, H., 2014. Affective temperaments and antidepressant response in the clinical management of mood disorders. J. Affect. Disord. 155 (1), 138–141. https://doi.org/10.1016/j.jad.2013.10.038.

Dorrego, M.F., Canevaro, L., Kuzis, G., Sabe, L., Starkstein, S.E., 2002. A randomized, double-blind, crossover study of methylphenidate and lithium in adults with attention-deficit/hyperactivity disorder: preliminary findings. J. Neuropsychiatr. Clin. Neurosci. 14 (3), 289–295. https://doi.org/10.1176/jnp.14.3.289.

England-Mason, G., 2020. Emotion regulation as a Transdiagnostic feature in children with neurodevelopmental disorders. Curr. Dev. Disord. Rep. 7 (3), 130–138. https://doi.org/10.1007/s40474-020-00200-2.

Faraone, S.V., Rostain, A.L., Blader, J., Busch, B., Childress, A.C., Connor, D.F., Newcorn, J.H., 2018. Practitioner review: emotional dysregulation in attention-deficit/hyperactivity disorder - implications for clinical recognition and intervention. J. Child Psychol. Psychiatry Allied Discip. https://doi.org/10.1111/jcpp.12899.

Freitag, G.F., Grassie, H.L., Jeong, A., Mallidi, A., Comer, J.S., Ehrenreich-May, J., Brotman, M.A., 2023. Systematic review: questionnaire-based measurement of emotion dysregulation in children and adolescents. J. Am. Acad. Child Adolesc. Psychiatry 62 (7), 728–763. https://doi.org/10.1016/j.jaac.2022.07.866.

Gratz, K.L., Roemer, L., 2004. Multidimensional assessment of emotion regulation and dysregulation: development, factor structure, and initial validation of the difficulties in emotion regulation scale. J. Psychopathol. Behav. Assess. 26 (1), 41–54. https://doi.org/10.1023/B:JOBA.0000007455.08539.94.

Guy, W., 1976. ECDEU Assessment Manual for Psychopharmacology, Revised. US Department of Health, Education, and Welfare Publication (ADM). https://www.scirp.org/(S(351jmbntvnsjt1aadkposzje))/reference/ReferencesPapers.aspx?ReferenceID=1265746.

Hantouche, E.G., 2014. Les tempéraments affectifs: l'architecture naturelle de nos émotions. Josette Ly.

Koukopoulos, A., Sani, G., Koukopoulos, A.E., Minnai, G.P., Girardi, P., Pani, L., Albert, M.J., Reginaldi, D., 2003. Duration and stability of the rapid-cycling course: a long-term personal follow-up of 109 patients. J. Affect. Disord. 73 (1–2), 75–85. https://doi.org/10.1016/S0165-0327(02)00321-X.

Koukopoulos, A., Sani, G., Albert, M.J., Minnai, G.P., Koukopoulos, A.E., 2005. Agitated depression: spontaneous and induced. In: Bipolar Disorders: Mixed States, Rapid-Cycling, and Atypical Forms. Cambridge University Press, pp. 157–186. https://doi.org/10.1017/CBO9780511544019.008.

Koukopoulos, A., Sani, G., Koukopoulos, A.E., Albert, M.J., Girardi, P., Tatarelli, R., 2006. Endogenous and exogenous cyclicity and temperament in bipolar disorder: review, new data and hypotheses. J. Affect. Disord. 96 (3), 165–175. https://doi.org/10.1016/j.jad.2006.08.031.

Lenzi, F., Cortese, S., Harris, J., Masi, G., 2018. Pharmacotherapy of emotional dysregulation in adults with ADHD: a systematic review and meta-analysis. Neurosci. Biobehav. Rev. 84, 359–367. https://doi.org/10.1016/j.neubiorev.2017.08.010.

Marwaha, S., Parsons, N., Broome, M., 2013a. Mood instability, mental illness and suicidal ideas: results from a household survey. Soc. Psychiatry Psychiatr. Epidemiol. 48 (9), 1431–1437. https://doi.org/10.1007/s00127-013-0653-7.

Marwaha, S., Wolke, D., Eyden, J., He, Z., Singh, S.P., Broome, M., Scott, J., 2013b. How is affective instability defined and measured? a systematic review. Psychol. Med. 44 (09), 1793–1808. https://doi.org/10.1017/s0033291713002407.

Masi, G., Sesso, G., Pfanner, C., Valente, E., Molesti, A., Placini, F., Boldrini, S., Loriaux, N., Drago, F., Montesanto, A., Pisano, S., Milone, A., 2021. An exploratory study of emotional dysregulation dimensions in youth with attention deficit hyperactivity disorder and/or bipolar spectrum disorders. Front. Psychiat. 12, 619037.

Mazefsky, C.A., 2015. Emotion regulation and emotional distress in autism spectrum disorder: foundations and considerations for future research. In. J. Autism Dev. Disord. 45 (11), 3405–3408. https://doi.org/10.1007/s10803-015-2602-7.

McLean, C.P., Foa, E.B., 2017. Emotions and emotion regulation in posttraumatic stress disorder. Curr. Opin. Psychol. 14, 72–77. https://doi.org/10.1016/j.copsyc.2016.10.006.

Melartin, T., Häkkinen, M., Koivisto, M., Suominen, K., Isometsä, E., 2009. Screening of psychiatric outpatients for borderline personality disorder with the McLean Screening Instrument for Borderline Personality Disorder (MSI-BPD). Nord. J. Psychiat. 63 (6), 475–479. https://doi.org/10.3109/08039480903062968.

Miola, A., Cattarinussi, G., Antiga, G., Caiolo, S., Solmi, M., Sambataro, F., 2022. Difficulties in emotion regulation in bipolar disorder: a systematic review and meta-analysis. J. Affect. Disord. 302, 352–360. https://doi.org/10.1016/j.jad.2022.01.102.

Nigg, J.T., 2017. Annual research review: on the relations among self-regulation, self-control, executive functioning, effortful control, cognitive control, impulsivity, risk-taking, and inhibition for developmental psychopathology. J. Child Psychol. Psychiatry Allied Discip. 58 (4), 361–383. https://doi.org/10.1111/jcpp.12675.

Ochsner, K.N., Gross, J.J., 2005. The cognitive control of emotion. Trends Cogn. Sci. 9 (5), 242–249. https://doi.org/10.1016/j.tics.2005.03.010.

Pallucchini, A., Carli, M., Scarselli, M., Maremmani, I., Perugi, G., 2021. Symptomatological variants and related clinical features in adult attention deficit hyperactive disorder. Int. J. Environ. Res. Public Health 18 (3), 1–13. https://doi.org/10.3390/ijerph18030922.

Perugi, G., Akiskal, H.S., 2002. The soft bipolar spectrum redefined: focus on the cyclothymic, anxious-sensitive, impulse-dyscontrol, and binge-eating connection in bipolar II and related conditions. Psychiatr. Clin. N. Am. 25 (4), 713–737. https://doi.org/10.1016/S0193-953X(02)00023-0.

Perugi, G., Toni, C., Akiskal, H.S., 1999. Anxious-bipolar comorbidity: diagnostic and treatment challenges. Psychiatr. Clin. N. Am. 22 (3), 565–583. https://doi.org/10.1016/S0193-953X(05)70096-4.

Perugi, G., Del Carlo, A., Benvenuti, M., Fornaro, M., Toni, C., Akiskal, K., Dell'Osso, L., Akiskal, H., 2011. Impulsivity in anxiety disorder patients: is it related to comorbid cyclothymia? J. Affect. Disord. 133 (3), 600–606. https://doi.org/10.1016/j.jad.2011.04.033.

Perugi, G., Angst, J., Azorin, J.-M.M., Bowden, C., Vieta, E., Young, A.H., Grp, B.S., 2013. Is comorbid borderline personality disorder in patients with major depressive episode and bipolarity a developmental subtype? Findings from the international BRIDGE study. J. Affect. Disord. 144 (1–2), 72–78. https://doi.org/10.1016/j.jad.2012.06.008.

Perugi, G., Hantouche, E., Vannucchi, G., 2016. Diagnosis and treatment of Cyclothymia: the "primacy" of temperament. Curr. Neuropharmacol. 15 (3), 372–379. https://doi.org/10.2174/1570159x14666160616120157.

Peselow, E.D., Dunner, D.L., Fieve, R.R., Lautin, A., 1981. Prophylactic effect of lithium against depression in cyclothymic patients: a life-table analysis. Compr. Psychiatry 22 (3), 257–264. https://doi.org/10.1016/0010-440X(81)90083-3.

Powers, A., Stevens, J., Fani, N., Bradley, B., 2015. Construct validity of a short, self report instrument assessing emotional dysregulation. Psychiatry Res. 225 (1–2), 85–92. https://doi.org/10.1016/j.psychres.2014.10.020.

Quaranta, G., Barbuti, M., Pallucchini, A., Colombini, P., Moriconi, M., Gemmellaro, T., Tripodi, B., Palagini, L., Schiavi, E., Perugi, G., 2020. Relationships among delayed sleep phase disorder, emotional dysregulation, and affective temperaments in adults with attention deficit hyperactivity disorder and Cyclothymia. J. Nerv. Ment. Dis. 208 (11), 857–862. https://doi.org/10.1097/NMD.0000000000001209.

Quenneville, A.F., Kalogeropoulou, E., Nicastro, R., Weibel, S., Chanut, F., Perroud, N., 2022. Anxiety disorders in adult ADHD: a frequent comorbidity and a risk factor for externalizing problems. Psychiatry Res. 310 (December 2020), 1–6. https://doi.org/10.1016/j.psychres.2022.114423.

Reimherr, F.W., Marchant, B.K., Gift, T.E., Steans, T.A., Wender, P.H., 2015. Types of adult attention-deficit hyperactivity disorder (ADHD): baseline characteristics, initial response, and long-term response to treatment with methylphenidate. ADHD Attent. Def. Hyperact. Disord. 7 (2), 115–128. https://doi.org/10.1007/s12402-015-0176-z.

Reimherr, F.W., Marchant, B.K., Gift, T.E., Steans, T.A., 2017. ADHD and anxiety: clinical significance and treatment implications. Curr. Psychiat. Rep. 19 (12), 109. https://doi.org/10.1007/s11920-017-0859-6.

Reimherr, F.W., Roesler, M., Marchant, B.K., Gift, T.E., Retz, W., Philipp-Wiegmann, F., Reimherr, M.L., 2020. Types of adult attention-deficit/hyperactivity disorder: a replication analysis. J. Clin. Psychiat. 81 (2), 21798. https://doi.org/10.4088/JCP.19M13077.

Rigucci, S., Sarubbi, S., Erbuto, D., Rogante, E., Hantouche, E.G., Innamorati, M., Lester, D., Pompili, M., 2021. Negative emotion dysregulation is linked to the intensity of suicidal ideation in a mixed inpatient sample. J. Affect. Disord. 281, 605–608. https://doi.org/10.1016/j.jad.2020.11.108.

Sloan, E., Hall, K., Moulding, R., Bryce, S., Mildred, H., Staiger, P.K., 2017. Emotion regulation as a transdiagnostic treatment construct across anxiety, depression, substance, eating and borderline personality disorders: a systematic review. Clin. Psychol. Rev. 57 (September), 141–163. https://doi.org/10.1016/j.cpr.2017.09.002.

Spera, V., Maiello, M., Pallucchini, A., Novi, M., Elefante, C., De Dominicis, F., Palagini, L., Biederman, J., Perugi, G., 2020. Adult attention-deficit hyperactivity disorder and clinical correlates of delayed sleep phase disorder. Psychiatry Res. 291, 113162 https://doi.org/10.1016/j.psychres.2020.113162.

Stellern, J., Xiao, K. Bin, Grennell, E., Sanches, M., Gowin, J.L., Sloan, M.E., 2023. Emotion regulation in substance use disorders: a systematic review and meta-analysis. Addiction 118 (1), 30–47. https://doi.org/10.1111/add.16001.

Stone, M.H., 2022. Borderline personality disorder: clinical guidelines for treatment. Psychodyn. Psychiat. 50 (1), 5–26. https://doi.org/10.1521/PDPS.2022.50.1.45.

Thompson, R.A., 1994. Emotion regulation: a theme in search of definition. Monogr. Soc. Res. Child Dev. 59 (2–3), 25–52. http://www.ncbi.nlm.nih.gov/pubmed/7984164.

Thompson, R.A., 2019. Emotion dysregulation: a theme in search of definition. Dev. Psychopathol. 31 (3), 805–815. https://doi.org/10.1017/S0954579419000282.

Visted, E., Vøllestad, J., Nielsen, M.B., Schanche, E., 2018. Emotion regulation in current and remitted depression: a systematic review and meta-analysis. Front. Psychol. 9 https://doi.org/10.3389/fpsyg.2018.00756.

Wender, P.H., 1998. Attention-deficit hyperactivity disorder in adults. Psychiatr. Clin. North Am. 21 (4), 761–774 v. https://doi.org/10.1016/s0193-953x(05)70039-3.

Zimmerman, M., Balling, C., Dalrymple, K., Chelminski, I., 2019. Screening for borderline personality disorder in psychiatric outpatients with major depressive disorder and bipolar disorder. J. Clin. Psychiat. 80 (1) https://doi.org/10.4088/JCP.18m12257.